Communication Signals and Radio Receiver

Project Description:

In this lesson we will examine the background and history of communication systems and signals. We will utilize internet websites and computer programs to understand the type of signals. Finally, we will build our own Radio Receiver circuit to listen to an AM station.

Project Objectives

- The Students in the lesson will learn the basics of communication signal, and its types.
- The Students in the lesson will understand and characterize the type of frequencies, low, mid, and high.
- The Students in the lesson will finally will build a radio receiver circuit.
- The Students in the lesson will understand basics of soldering and how to do soldering.

Materials Needed

AM Radio Kit, Computer with internet access, Pencils, Soldering Iron Stations, Solder, De soldering wax, and Wires.

North Dakota State Standards:

9-10.1.1. Explain how models can be used to illustrate scientific principles
9-10.2.2. Use appropriate safety equipment and precautions during investigations.
9-10.6, 1. Use appropriate technologies and technique to solve a problem.
9-10.8.3. Explain how individuals and groups, from different disciplines in and outside of science, contribute to science at different levels of complexity.

Session Organization

11:00-11:30	Cultural connection
11:30-12:00	Background information using power point
12:00-12:30	Lunch
12:30-1:00	Computer Activity on signals, and its types
1:00-2:30	Work on soldering AM receiver
2:30-3:00	Demo and student presentation

Application and Career paths:

Signal Engineer, Radio Engineer, Communication Engineers, Scientists, and Wireless Engineer.

Introduction to Signals in Communication Systems

A ***signal*** as referred to in communication systems, signal processing, and electrical engineering "is a function that conveys information about the behavior or attributes of some phenomenon. In the physical world, any quantity exhibiting variation in time or variation in space (such as an image) is potentially a signal that might provide information on the status of a physical system, or convey a message between observers, among other possibilities. The *IEEE Transactions on Signal Processing* elaborates upon the term "signal" as follows:

The term "signal" includes, among others, audio, video, speech, image, communication, geophysical, sonar, radar, medical and musical signals.

Other examples of signals are the output of a thermocouple, which conveys temperature information, and the output of a pH meter which conveys acidity information. Typically, signals are often provided by a sensor, and often the original form of a signal is converted to another form of energy using a transducer. For example, a microphone converts an acoustic signal to a voltage waveform, and a speaker does the reverse.

The formal study of the information content of signals is the field of information theory. The information in a signal is usually accompanied by noise. The term *noise* usually means an undesirable random disturbance, but is often extended to include unwanted signals conflicting with the desired signal (such as crosstalk). The prevention of noise is covered in part under the heading of signal integrity. The separation of desired signals from a background is the field of signal recovery, one branch of which is estimation theory, a probabilistic approach to suppressing random disturbances.

Engineering disciplines such as electrical engineering have led the way in the design, study, and implementation of systems involving transmission, storage, and manipulation of information. In the latter half of the 20th century, electrical engineering itself separated into several disciplines, specializing in the design and analysis of systems that manipulate physical signals; electronic engineering and computer engineering as examples; while design engineering developed to deal with functional design of man–machine interfaces.

Signals:

1. Types of Signals – Sine, Square, Saw-tooth (Ramp) and Triangular signals.

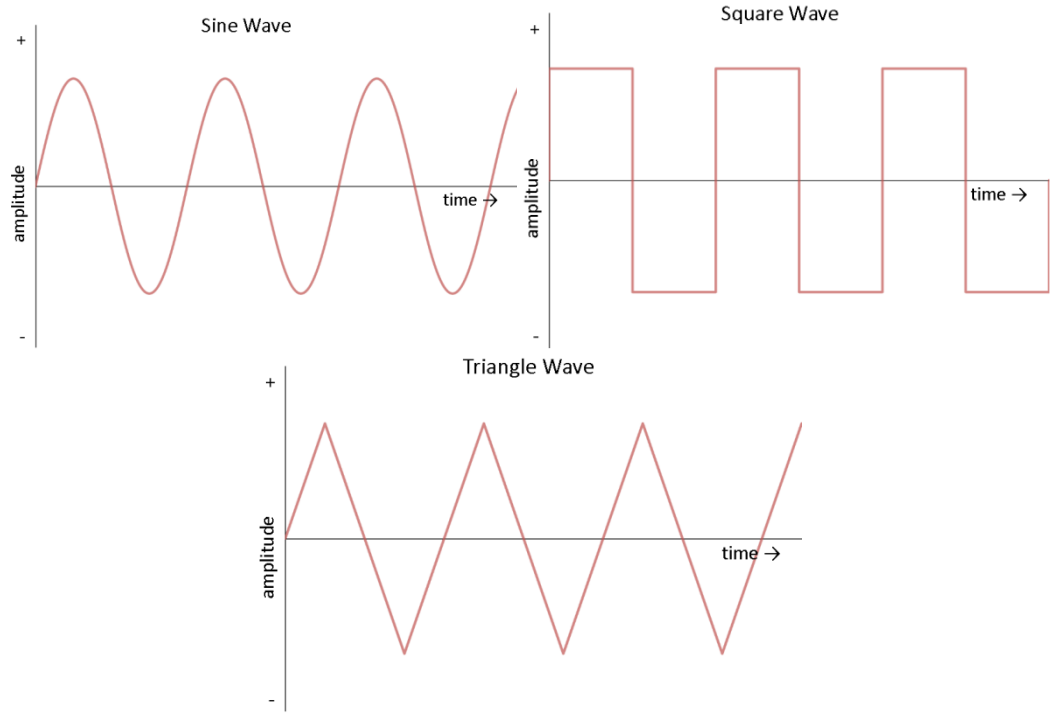

2. Fundamental Components of a signal:
   a) Amplitude (A)
   b) Frequency (f)

c) Phase (Φ)

3. Mathematical representation of a signal: $A * \sin(f * t + \Phi)$
4. What are Alternating current (AC) and Direct Current (DC):

In **direct current** (DC), the electric charge (current) only flows in one direction. Electric charge in **alternating current** (AC), on the other hand, changes direction periodically.

Direct Current

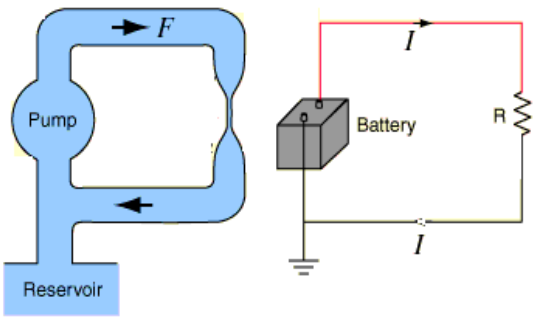

Alternating Current: The Water Analogy

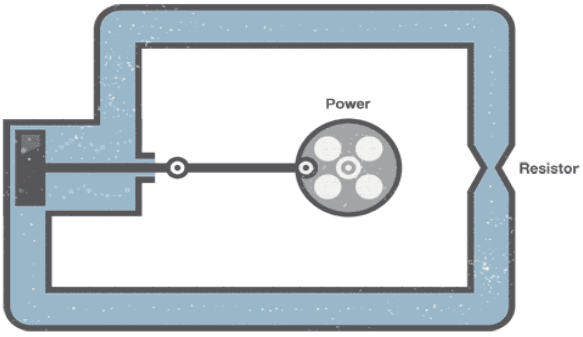

(AC Demo: https://dlnmh9ip6v2uc.cloudfront.net/assets/a/0/7/b/a/522783e0757b7fc2168b4567.gif)

Radio Waves:

1. What is a Radio wave?
2. Types of Radio Waves
   a) **Amplitude modulation (AM)** In AM, a radio wave known as the "carrier" or "carrier wave" is modulated in amplitude by the signal that is to be transmitted. **535 to 1705 KHz**

   b) **Frequency Modulation (FM**) In FM, a radio wave known as the "carrier" or "carrier wave" is modulated in frequency by the signal that is to be transmitted. **88 to 108 MHz.**

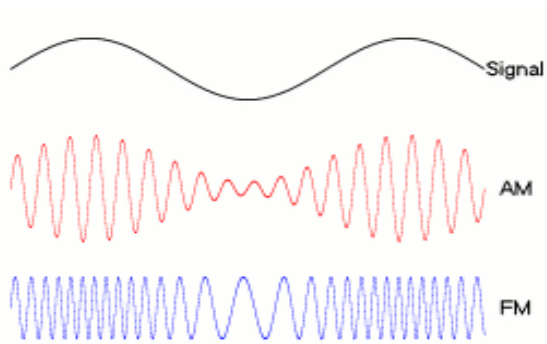

(http://static.diffen.com/uploadz/4/4e/AM-FM-waves.gif)

3. Uses of Radio waves : all kinds of communication
4. A Brief History of Radio Devices: http://www.youtube.com/watch?v=Y-A9wrL88nM

Activity 1: Generating Signals of Different Frequencies.

In this activity, students will work with a computer and do an activity identifying sounds and signals while changing frequencies. Some parameters students will be introduced are:

- Frequency
- Tone
- Sound
- Cellular Frequencies
- AM Frequencies
- FM Frequencies

Steps to be followed:

1. Go to the link : http://onlinetonegenerator.com/
2. Set frequency anywhere between 200 Hertz – 15000 Hertz.
3. Hit "Play" button.
4. You will be hearing a sound with respect to that particular frequency.
5. Try changing the value of Frequency and observe the change in the tone.
6. You can also select different types of signals (Sine, Square, saw-tooth and Triangle waveforms)

Observation:

What do you observe from different types of frequencies?

Table: Signal Observation Table

Sine Waveform with a Low frequency	Sine Waveform with a High frequency
Square with a Low frequency	Square with a High frequency
Triangle Waveform with a Low frequency	Triangle with a High frequency

Saw-tooth Waveform with a Low frequency	Saw-Tooth with a High frequency

<u>Activity II:</u> Building an AM Radio Circuit

Part I:

Learn about different types of elements used in Electronic devices. (Refer to Page 10)

1. What is a Resistor?

2. What is a Capacitor?

3. What are Transistors?

4. What is a PC board?

5. What is an Antenna?

6. Where are the above elements used? Few examples

Part II:

Learn about Soldering and build the AM Radio Circuit using the elements provided in the kit. (Refer to Page 4)

Safety Instructions:

1. Students **should** wear safety glasses to do the soldering work.
2. **Do not touch** the heated surface of the soldering iron. Hold to the plastic area.